WUXI XUYANG ELECTRONIC CO., LTD

SOT-23 Plastic-Encapsulate Diodes

BAV99LT1 SWITCHING DIODE

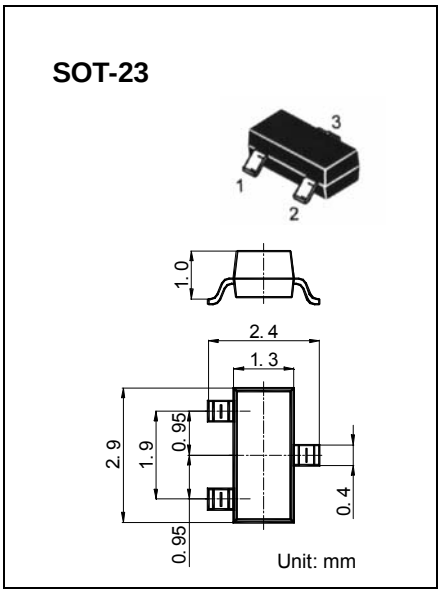

FEATURES

Power dissipation

$P_{D:}$ 225 mW (Tamb=25℃)

Forward Current

$I_{F:}$ 215 m A

Reverse Voltage

V_R: 70 V

Operating and storage junction temperature range

T_J, T_{stg}: -55℃ to +150℃

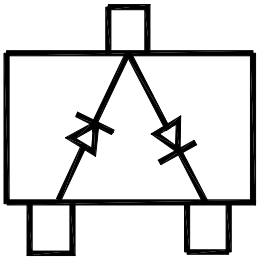

Marking A7

ELECTRICAL CHARACTERISTICS (Tamb=25℃ unless otherwise specified)

Parameter	Symbol	Test conditions	MIN	MAX	UNIT
Reverse breakdown voltage	$V_{(BR)}$	I_R= 100μA	70		V
Reverse voltage leakage current	I_R	V_R=70V		2.5	μA
Forward voltage	V_F	I_F=1mA I_F=10mA I_F=50mA I_F=150mA		715 855 1000 1250	mV
Diode capacitance	C_D	V_R=0V, f=1MHz		1.5	pF
Reverse recovery time	t_{rr}	I_F=I_R=10mA V_R=5V R_C=100Ω		6	nS